Test Result Sheet

nanotechnology enriched
Dex
premium lubricants

DESIGNED TO MEET CHALLENGES

DEX TPEO SAE 40

FZG TEST RESULTS

What are the FZG scuffing load tests all about?

FZG is the Technical Institute for the Study of Gears and Drive Mechanisms (Forschungsstelle für Zahnräder und Getriebebau) of the Technical University in Munich, where this test rig was developed. The several scuffing load tests performed on the FZG test rig serve for determining the extent to which gear lubricants help to prevent scuffing on the tooth faces at the lubrication gap. Scuffing occurs locally where the gears are in mesh,

i.e. where at roughness peaks in contact temperatures rise sharply ('flash temperatures'), depending on the load, peripheral speed and oil sump temperature. At these contact points, the surfaces weld together briefly and are torn apart again as the gears revolve, which leads to partial destruction of the surfaces.The outperforming test results with respect to the Dex Premium Lubricants are a result of the DEX QM Technology. The scuffing load capacity of a lubricant depends primarily on the base oils and additives used, and the consequent lubricant film thickness.

Standard scuffing load test acc. to DIN 51354 FZG (A/8.3/90)

Gear pair type A, peripheral speed 8.3 m/s, oil sump temperature 90 °C, center distance in test gear 91.5 mm.

At first, the gear pair is run in at low load stages. Then the load stages are increased, which leads to higher flash temperatures occurring in the gears. The running-in smoothens the surfaces.

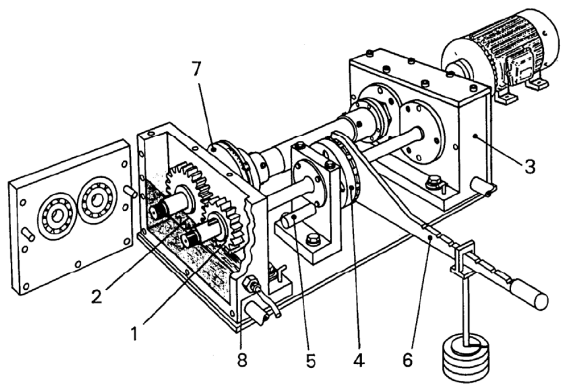

Drawing of an FZG four square gear oil tester

1. Test pinion
2. Test wheel
3. Drive gear case
4. Rotating coupling
5. Locking pin
6. Load lever with weights

Test Result Sheet

List for comparing the various FZG scuffing load tests:

The various scuffing load tests can be classified according to the occurring flash temperatures, which renders a list as follows.

Scuffing load test	Flash temp. Δϑ [K]	Results
FZG (A/8.3/90) sls > 11	≈ 370	
FZG (A/8.3/90) sls > 12	≈ 420	
FZG (A/16.6/90) sls > 11	≈ 460	
FZG (A/8.3/90) sls > 13	**≈ 500**	**DEX TPEO SAE 40**
FZG (A/16.6/90) sls > 12	≈ 520	
FZG (A/8.3/90) sls > 14	≈ 570	
FZG (A/16.6/90) sls > 13	≈ 610	
FZG (A10/16.6R/90) sls > 10 = API GL 4	≈ 620	
FZG (S-A10/16.6R/90) ls 8 PASS = API GL 4	≈ 770	
FZG (S-A10/16.6R/90) ls 9 PASS = API GL 5	≈ 950	

The indicated flash temperatures (temperature increase over tooth bulk temperature 1) were determined by means of the integral temperature method DIN 3990

Test Report Results

The Testing Institute ISP

Chemical-phisical analysis
20-36160-001

Sample: **DEX TPEO SAE 40**

Analysis	Results	
Test rig	10 - LG9093	
Gear no.	7 321	
Gear side	2	
Speed at pinion	8.3 m/s	
Oil temperature (start)	90 °C	
Oil temperature (EOT)	159 °C	
Failure load stage	**13**	
Torque at pinion	626.9 Nm	